Detent tension adjustment screw - This screw can be adjusted to increase or decrease the effort to move control handle out of detent positions (cover must be removed). Turning screw clockwise will increase tension. Adjust to tension desired.

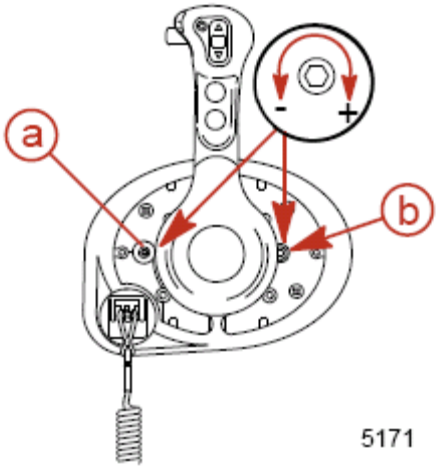

a - Detent tension adjustment screw

b - Control handle tension adjustment screw

Detent tension adjustment screw - This screw can be adjusted to increase or decrease the effort to move control handle out of detent positions (cover must be removed). Turning the screw clockwise will increase tension. Adjust to the desired tension.

Control handle tension adjustment screw - This screw can be adjusted to increase or decrease the tension on the control handle (cover must be removed). This will help prevent unwanted motion of the remote control handle in rough water. Turn the screw clockwise to increase tension and counterclockwise to decrease tension. Adjust to the desired tension.

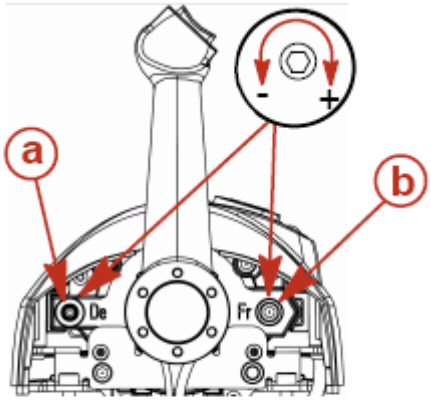

a - Detent tension adjustment screw

b - Control handle tension adjustment screw